SENSETECZ ENGINEERING
Better Performance
Better Service

Insulation Tester

Model 600

1.0 Application

Insulation Tester uses the most advanced electrometer circuit combined with electrical static charge reset circuit to measure ultra high resistances from 110Gohm to 100Tohm precisely within 1 minute. The adjustable bias voltage (measuring voltage) can be changed from 5Vdc to 100Vdc. Insulation low alarm can be set at any resistance value within the range. Once the measured value is lower than the setting, RED LED indicator will turn on. The screen background will change to RED and the beeper will sound. The beeper alarm sound can be silenced by pressing any pushbutton.

2.0 Working Principle

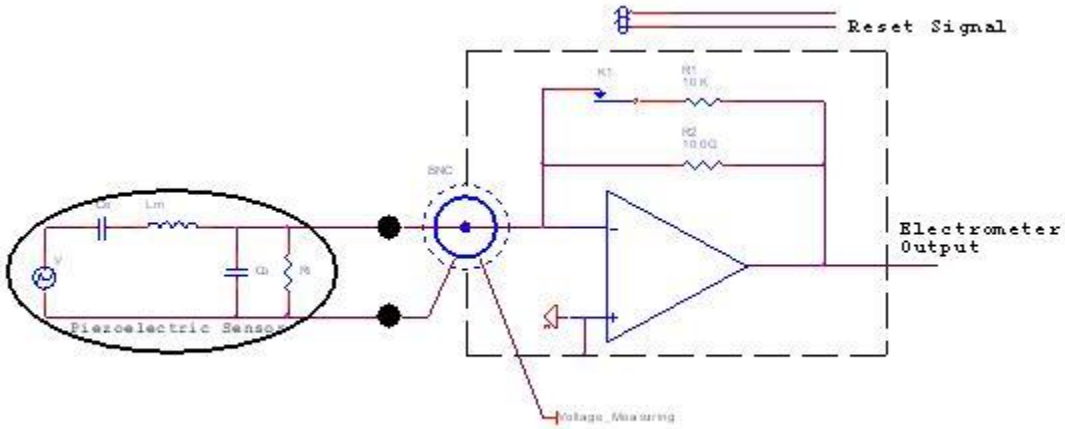

Simplified Schematic

The center pin of the DUT (device under test) connects to the inverted input of the electrometer amplifier via a BNC. The Chassis (here shielding) will provide measuring voltage which can be adjusted from 5Vdc to 100Vdc. The output voltage of the electrometer will be linear to the currents flow into the DUT. The microcontroller will sample both measuring voltage and electrometer outputs. The resistance of the DUT equals to the result of the measuring voltage divided by the currents flow in. In order to measure ultra high resistance, the following factors have been taken into account carefully in 600's design.

- **Sensitivity of the electrometer circuit:** The amplifier chosen for this application can sense the current down to 0.1fA. With 5Vdc measuring voltage, 100Tohm resistance will create 50fA current which is 500 times higher than the measuring limit of the amplifier. This ensures the measurement of the highest test range 100T very reliable.

- **Temperature compensation:** All current electrometer amplifiers are sensitive to temperature. With rich electrometer design experience, even without temperature compensation channel, 600's electrometer just has 2fA drift from 10°C to 30°C. With Sensetecz's most advanced temperature compensation circuit, the temperature drift has been reduced to 0.1fA from 0°C to 40°C. The microcontroller will calculate the actual resistance based upon both of DUT measuring channel and temperature compensation channel. The actual signal is the difference of the two channels.
- **External charge interference reduction:** As shown above, the electrometer is installed in a small metal enclosure and the DUT's cable provides the shielding, thus the all sensitive circuit is shielded. This ensures the external charges not affect the measurement at all.
- **Discharge the static charge to speed up the measurement:** At the moment of DUT connects to the input of the electrometer, a large amount of charges will be introduced to the electrometer circuit. Thus the discharge circuit becomes a "must", otherwise the electrometer may take quilt a while to get stabilized. This is because the ultra high value feedback resistor needs to be used for ultra high resistance measuring. A high insulation reed switch has been employed for model 600 to apply 10Kohm (R1) to the feedback loop for quick discharging.
- **Measuring voltage adjustable from 5Vdc to 100Vdc:** Some DUT's insulation varies along with the changes of the measuring voltages. The variable measuring voltages of Sensetecz's 600 insulation tester provide the flexible measuring voltage adjustment from 5Vdc to 100Vdc.
- **Electrical safety and intrinsic safe to hazard environment:** Compliant to IEC Standard. 600 tester belongs to SELV (separated extra low voltage or safety extra low voltage) directive because of:
    - Adjustable measuring voltage type-the maximum voltage is less than 120Vdc.
    - Battery powered device and insulated with plastic housing.
    - Lack of return circuit path in case of human being body contacting. The negative path of the measuring voltage is not accessible to operators.
    - Current limit of intrinsic safe design. As the figure below shows, the measuring voltages only apply to the BNC connector after R2, R3, P1, R8 and R15. These resistors will limit the current to a very low level at which the total power transferred to the BNC connector will be lower than 25mW at any measuring voltage value. This erases sparkling in the system. Meanwhile, such low power outputs make model 600 fall into "simple apparatus category" and can be exempted from the requirements of the certificate for hazard environmental application.

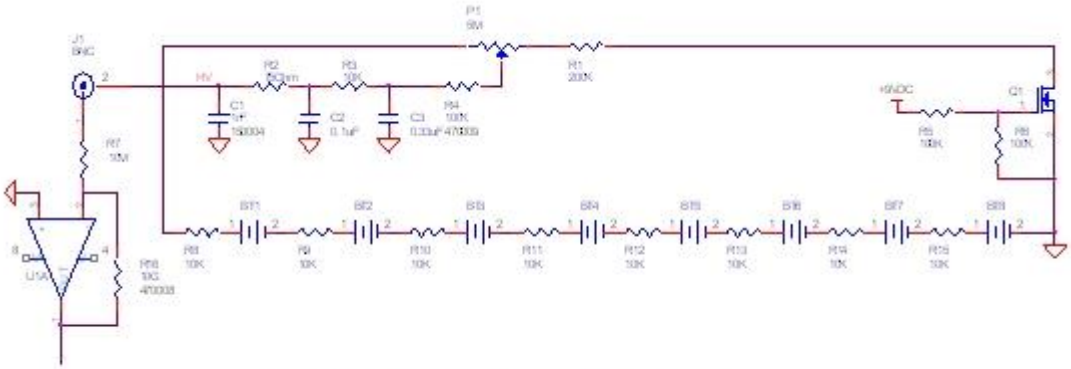

Simplified Measuring Voltage Circuit

3.0 Specification

- Accuracy: Range 0.11T to 5T: 5% or 0.1T whichever is bigger; Range 5T to 50T: 15%
- Measuring range: 0.11T to 100T
- Measuring voltage adjustment range: 5Vdc to 100Vdc
- Temperature: 40°C
- Drift: Range 0.11T to 5T, 0.01T within 30 days; Range 5T to 50T, 0.1T within 30 days
- Humidity: 0-95%RH
- Power consumption:
    - 9V battery: power supply, 4mA average. A regular 9V/750mAHr battery can last 180 hours
    - Measuring voltage battery: 20µA when 600 tester is powered on, less than 1µA when 600 tester is powered off. It is recommended to change all measuring voltage batteries once every 2 years
- Measuring time: Less than 1 minute
- Warm-up time: 2 minutes
- Dimension: L7-7/8" X W4.4" X H1.7"
- Weight: 1.5 LBs